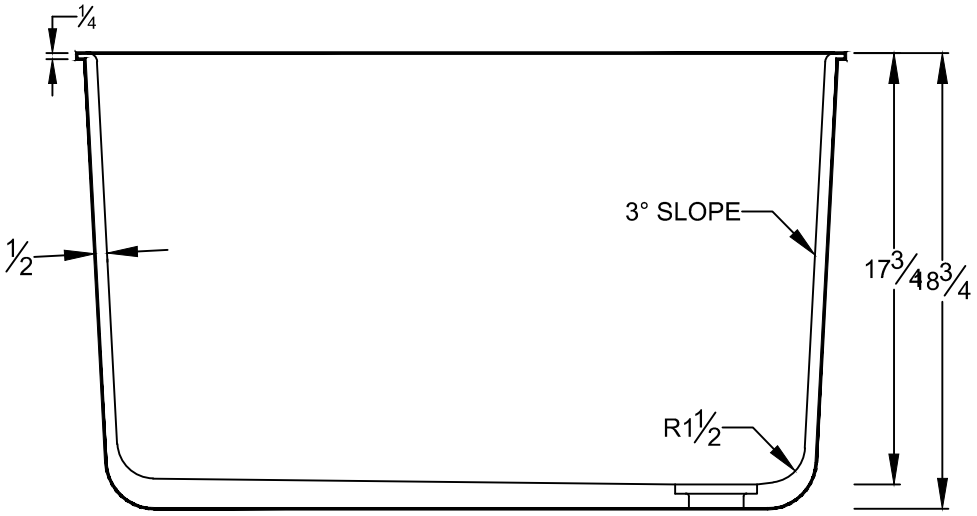

SECTION VIEW

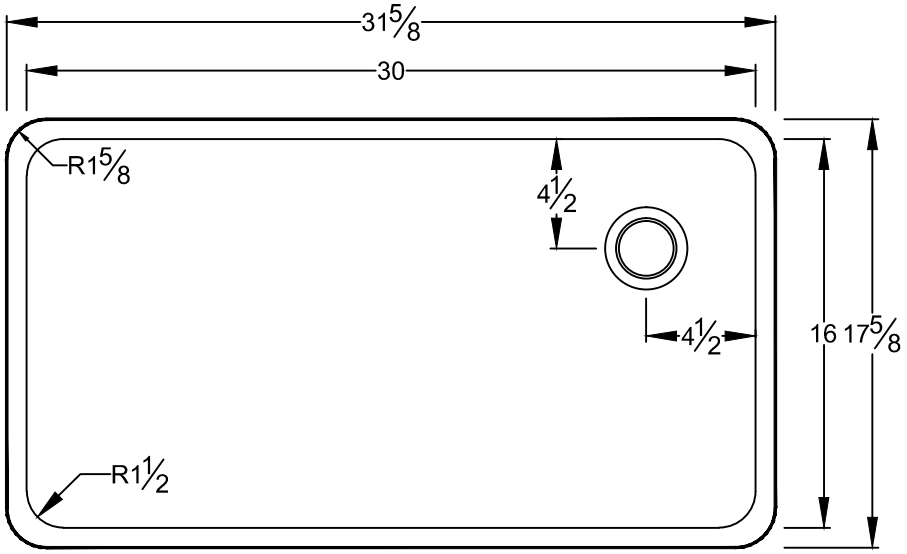

TOP VIEW

SINK MOLDED FROM EPOXY RESIN	SINK COLOR: □ BLACK - □ OTHER: _____
Pii PRIME industries inc. **4611 Main St.** **Lisle, IL 60532** **ph: 630/725-9200 - fax: 630/725-9201** **www.piilab.com**	THIS SINK SHIPS FROM TAYLOR, TX 76574

REV. DATE	WEIGHT	SINK MODEL
12/05/14	94 lbs.	PL61